Uncontrolled Copy

REV	ECO	REV BY	DATE	APPD	DATE
D	0025583	A. ARREOLA	05-03-2012	D. BALDERRAMA	05-03-2012

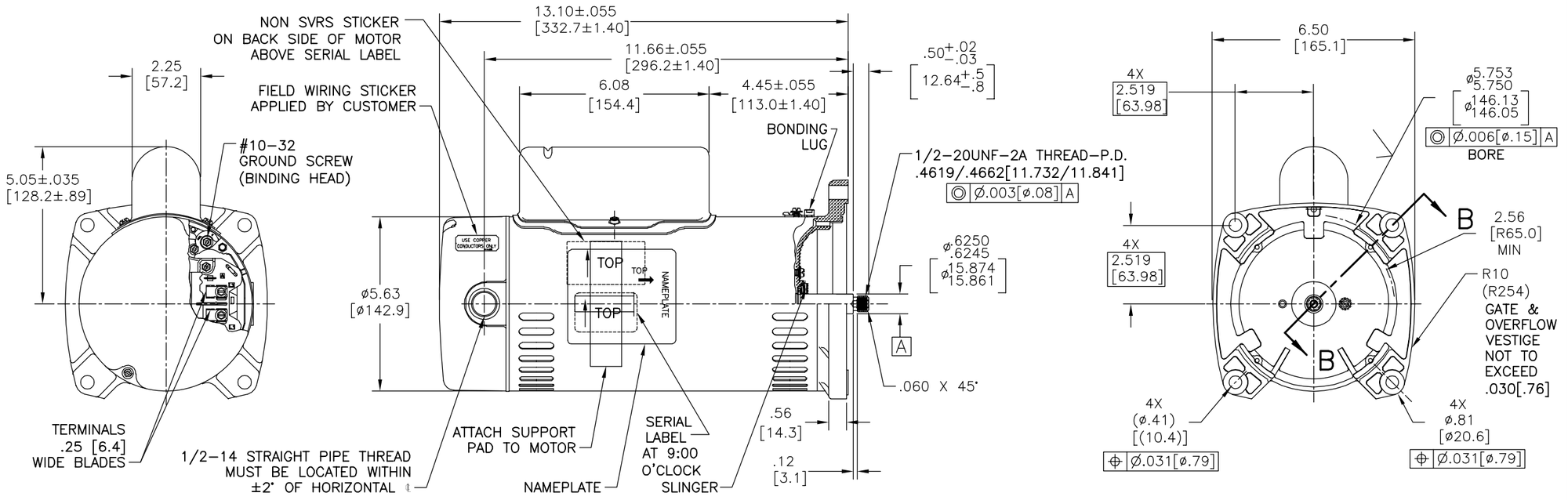

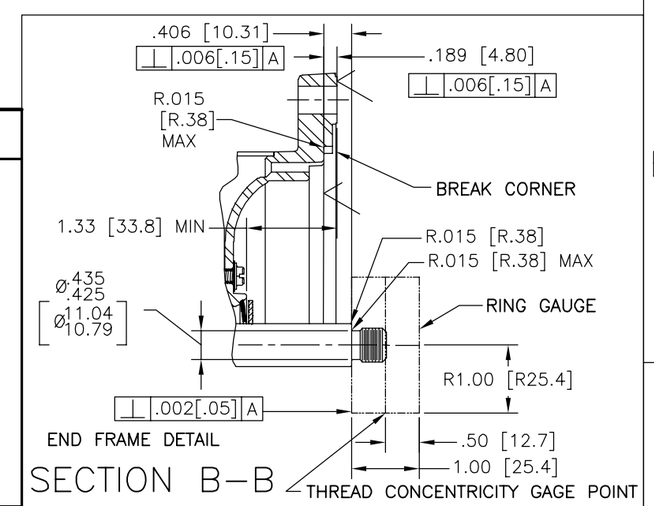

NAMEPLATE DATA

MODEL: K48L2P104B3
CUST PN: UQS1152R
HP: 1.5, 0.25 SF: 1.1
ROT: CCWPE
RPM: 3450/1725
TYPE: F/C CODE: G
FORM: FRAME: 48Y
VOLTS: 230
AMPS:
MAX AMPS: 7.7/2.8
SF AMPS: –
PH: 1 HZ: 60
INS: B AMB: 50°C
DUTY: CONT
ENCLOSURE: ODP
THERMALLY PROTECTED

EXTERNAL CONNECTION DIAGRAM

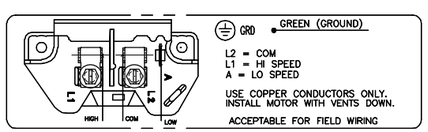

NOTES

1. FINISH PAINT TO BE SATIN BLACK.
2. .44[11.2] WRENCH FLATS ON SHAFT–FOR ACCESS TO THIS WRENCH FLAT REMOVE END COVER.
3. 303 STAINLESS STEEL SHAFT EXT.
4. LIMITS ON AMPLITUDE OF VIBRATION MEASURED AT BEARING–HOUSING=.001.
5. CAPACITOR HOUSING TO BE LOCATED WITHIN ±2.5° OF VERTICAL ℄ OF END FRAME (P.E.)

PERFORMANCE CURVE		APPROVED SAMPLE	
K48M2W18		0242331	
UL COMPONENT		CSA	
FILE#	CCN#	FILE#	GUIDE#
E25022	XEWR2	LR43341	4211-01
CUSTOMER	DISTRIBUTION SERVICES		

GEOMETRIC CHARACTERISTICS & SYMBOLS
- FLATNESS
- STRAIGHTNESS
- ANGULARITY
- PERPENDICULARITY (SQUARENESS)
- PARALLELISM
- ROUNDNESS (CIRCULARITY)
- CYLINDRICITY
- PROFILE OF ANY SURFACE
- PROFILE OF ANY LINE
- RUNOUT
- TRUE POSITION
- CONCENTRICITY
- SYMMETRY

ASME Y14.5M 1994

UNLESS OTHERWISE SPECIFIED
DIM. TOLERANCES ARE AS FOLLOWS:

	X	XX	XXX	XXXX
INCH	±.1	±.02	±.005	±.0005
mm	±0.5	±0.13	±0.013	

ANG. ±.50 DEG
REMOVE BURRS & BREAK SHARP EDGES:
INCH .003–.015 mm 0.1–0.4
CORNER FILLETS TO:
INCH .020 mm 0.5
MACHINE SURFACES:
INCH 125 mm 3.2
METRIC DIMS. SHOWN IN [BRACKETS]

DR BY: JAH	01-09-2007	
APPD: DRF	01-09-2009	
THIRD ANGLE PROJECTION	EDS DATE 11-11-2011	FORMAT REV G

CONFIDENTIAL: THIS DRAWING AND ITS INFORMATION ARE THE EXCLUSIVE AND CONFIDENTIAL PROPERTY OF REGAL–BELOIT CORPORATION AND ARE NOT TO BE DISCLOSED, DUPLICATED, DISTRIBUTED OR OTHERWISE USED WITHOUT THE WRITTEN CONSENT OF REGAL–BELOIT CORPORATION. –ALL RIGHTS RESERVED.

REGAL-BELOIT CORPORATION

DESCRIPTION: MODEL–PFHP–48FR OUTLINE

SIZE: C
DWG NO: UQS1152R
SCALE: NONE
SHEET: 1

Uncontrolled Copy

REVISION:	ECO	REVISADO POR:	FECHA:	APROBADO POR:	FECHA:
D	0025583	A. ARREOLA	05-03-2012	D. BALDERRAMA	05-03-2012

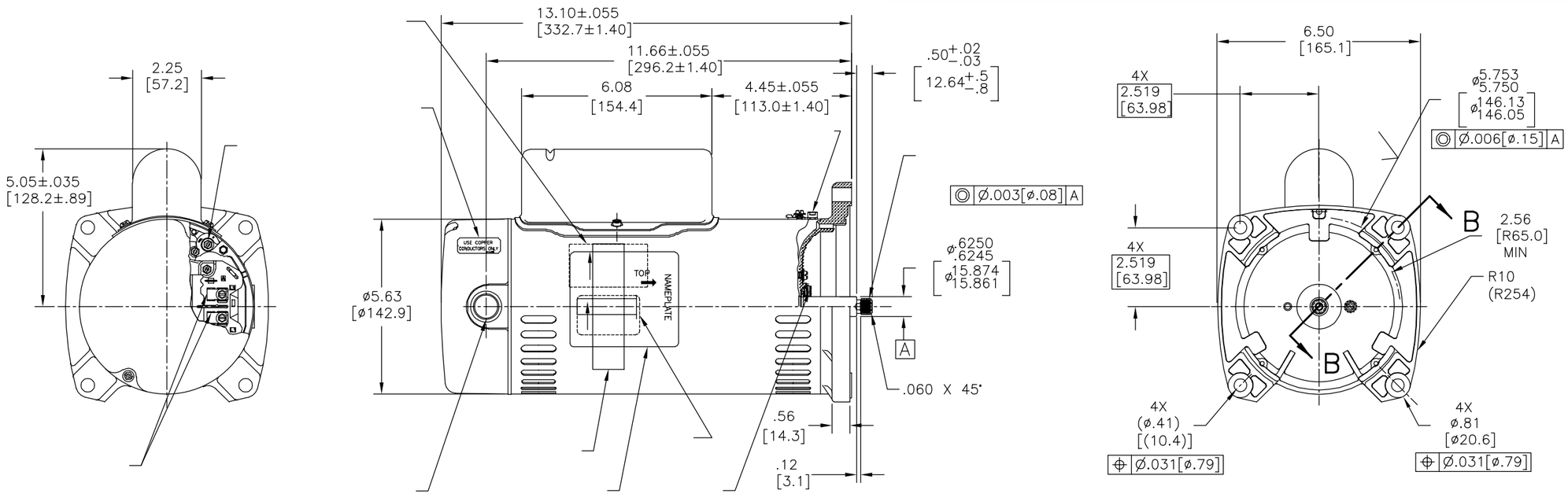

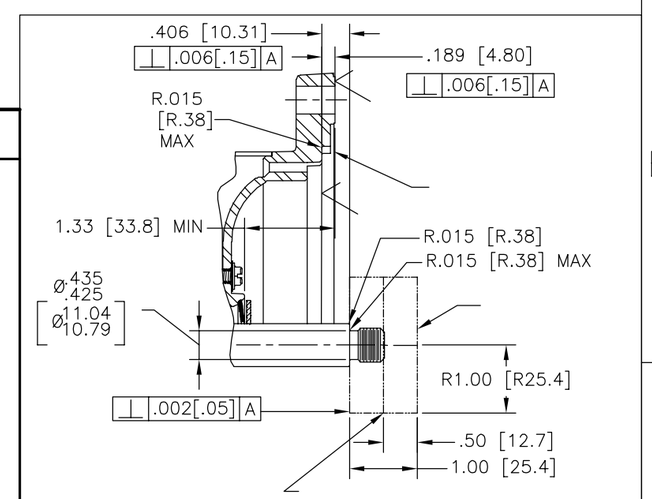

NAMEPLATE DATA

MODEL: K48L2P104B3
CUST PN: UQS1152R
HP: 1.5, 0.25 SF: 1.1
ROT: CCWPE
RPM: 3450/1725
TYPE: F/C CODE: G
FORM: FRAME: 48Y
VOLTS: 230
AMPS:
MAX AMPS: 7.7/2.8
SF AMPS: –
PH: 1 HZ: 60
INS: B AMB: 50°C
DUTY: CONT
ENCLOSURE: ODP
THERMALLY PROTECTED

EXTERNAL CONNECTION DIAGRAM

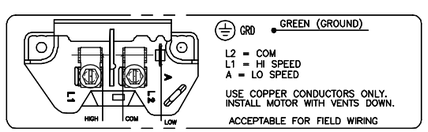

NOTES

PERFORMANCE CURVE		APPROVED SAMPLE	
K48M2W18		0242331	
UL COMPONENT		CSA	
FILE#	CCN#	FILE#	GUIDE#
E25022	XEWR2	LR43341	4211-01
CUSTOMER	DISTRIBUTION SERVICES		

CARACTERISTICAS DE GEOMETRIA Y SIMBOLOS
- PLANICIDAD
- RECTITUD
- ANGULARIDAD
- PERPENDICULARIDAD (A ESCUADRA)
- PARALELISMO
- REDONDEZ (CIRCULARIDAD)
- CILINDRICIDAD
- PERFIL DE CUALQUIER SUPERFICIE
- PERFIL DE CUALQUIER LINEA
- VARIACION
- POSICION REAL
- CONCENTRICIDAD
- SIMETRIA

ASME Y14.5M 1994

A MENOS QUE SE ESPECIFIQUE DE OTRA MANERA, LAS TOLERANCIAS DE LAS DIMS; SON LAS SIGUIENTES:

	X	XX	XXX	XXXX
PULG	±.1	±.02	±.005	±.0005
mm	±0.5	±0.13	±0.013	

ANG. ±.50 GRADOS
ELIMINAR REBABAS Y ORILLAS FILOSAS DEL BORDE.
PULG .003-.015 mm 0.1-0.4
FILETEAR ESQUINA: PULG .020 mm 0.5
MAQUINAR SUPERFICIES
PULG 125 mm 3.2
DIMS METRICAS MOSTRADAS [PARENTESIS]

DIBUJADO POR: JAH	01-09-2007
APROBADO POR: DRF	01-09-2009
TERCER ANGULO DE PROYECCION	FECHA EDS: 11-11-2011
	REV. FORMATO: G

CONFIDENCIAL: ESTE DIBUJO Y SU INFORMACION SON PROPIEDAD DE USO EXCLUSIVO Y CONFIDENCIAL DE REGAL-BELOIT CORPORATION. Y NO DEBERAN SER REVELADOS, DUPLICADOS, DISTRIBUIDOS O USARSE DE OTRA MANERA SIN EL CONSENTIMIENTO ESCRITO DE REGAL-BELOIT CORPORATION. -TODOS LOS DERECHOS RESERVADOS.

REGAL-BELOIT CORPORATION

DESCRIPCION: MODEL-PFHP-48FR OUTLINE

TAMAÑO: C
NUMERO DE DIBUJO: UQS1152R
ESCALA: NONE
HOJA: 1

Uncontrolled Copy

版本	ECO	编制	日期	批准	日期
D	0025583	A. ARREOLA	05-03-2012	D. BALDERRAMA	05-03-2012

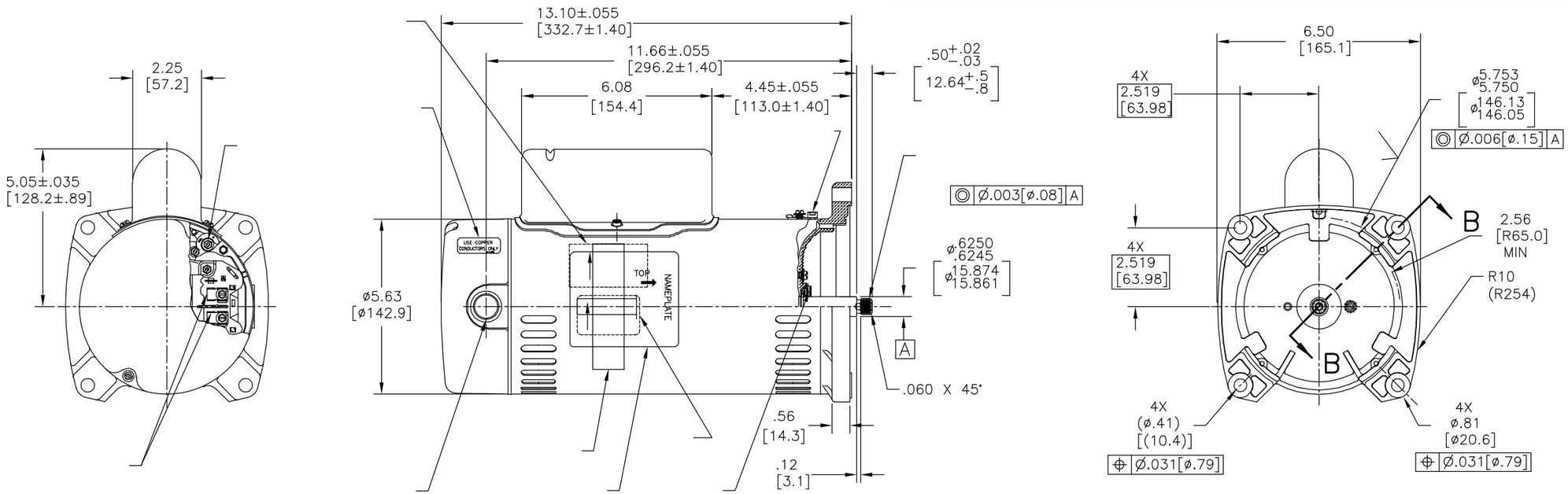

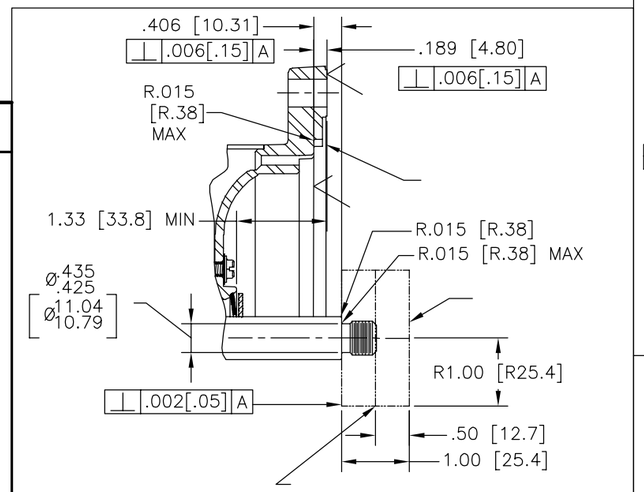

NAMEPLATE DATA

MODEL: K48L2P104B3
CUST PN: UQS1152R
HP: 1.5, 0.25 SF: 1.1
ROT: CCWPE
RPM: 3450/1725
TYPE: F/C CODE: G
FORM: FRAME: 48Y
VOLTS: 230
AMPS:
MAX AMPS: 7.7/2.8
SF AMPS: –
PH: 1 HZ: 60
INS: B AMB: 50°C
DUTY: CONT
ENCLOSURE: ODP
THERMALLY PROTECTED

EXTERNAL CONNECTION DIAGRAM

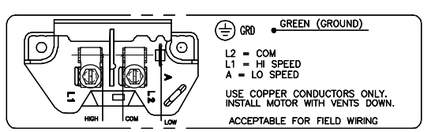

NOTES

PERFORMANCE CURVE		APPROVED SAMPLE	
K48M2W18		0242331	
UL COMPONENT		CSA	
FILE#	CCN#	FILE#	GUIDE#
E25022	XEWR2	LR43341	4211-01
CUSTOMER	DISTRIBUTION SERVICES		

形位公差
平面度
直线度
倾斜度
垂直度
平行度
圆度
圆柱度
面轮廓度
线轮廓度
圆跳动
位置度
同轴度
对称度

ASME Y14.5M 1994

除另有注明
尺寸公差如下：

	X	XX	XXX	XXXX
英寸	±.1	±.02	±.005	±.0005
毫米	±0.5	±0.13	±0.013	

角度 ±.50 度
清理毛刺和尖棱
英寸 .003-.015 毫米 0.1-0.4
内圆角
英寸 .020 毫米 0.5
表面粗糙度
英制 125 米制 3.2
米制尺寸显示在[ ]

绘图: JAH	01-09-2007	
批准: DRF	01-09-2009	
第三角投影	图纸格式发布日期	11-11-2011
	图纸格式版本	G

机密：本图纸及相关信息所有权归REGAL-BELOIT CORPORATION。未经REGAL-BELOIT CORPORATION书面授权，不得泄露、复制、传播或作其他用途。—版权所有

REGAL-BELOIT CORPORATION

名称
MODEL-PFHP-48FR
OUTLINE

图幅	图号	
C	UQS1152R	
比例 NONE		页号 1