REV	ECO	REV BY	DATE	APPD	DATE
D	0014523	AS	10-21-2010	TZ	10-21-2010

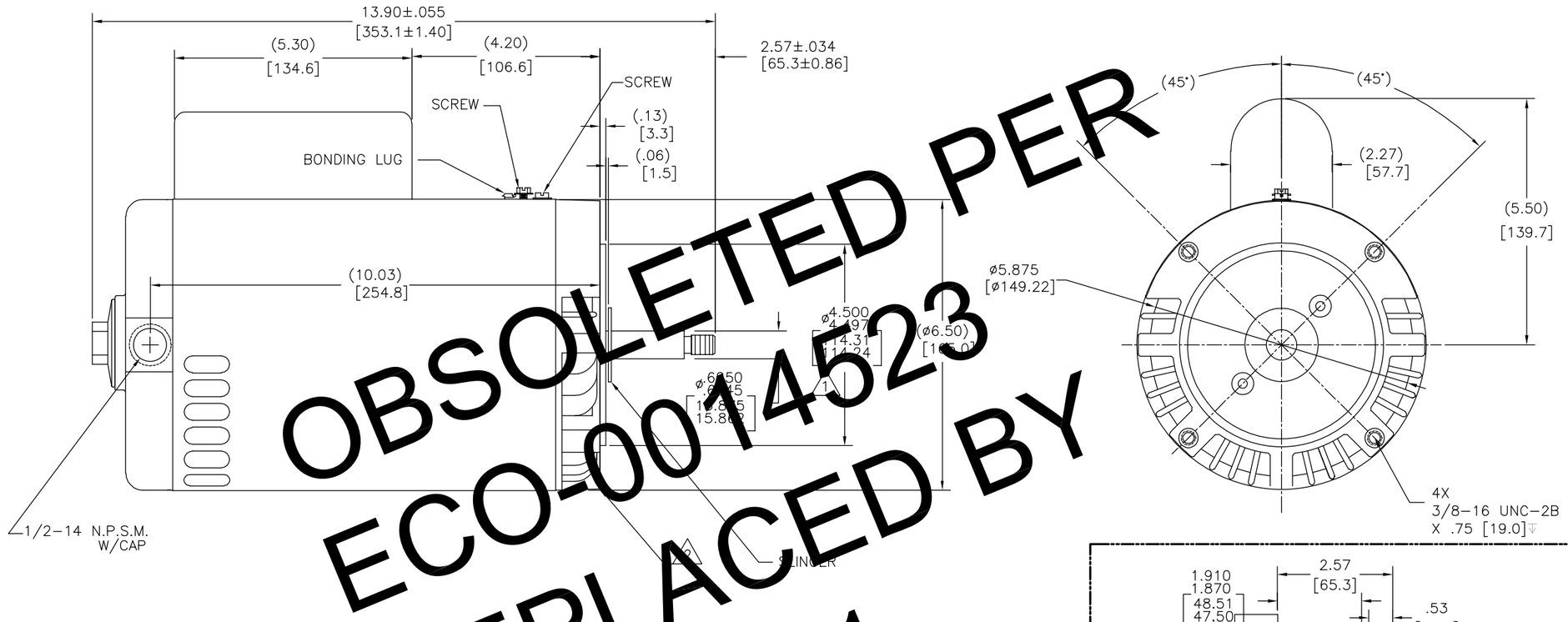

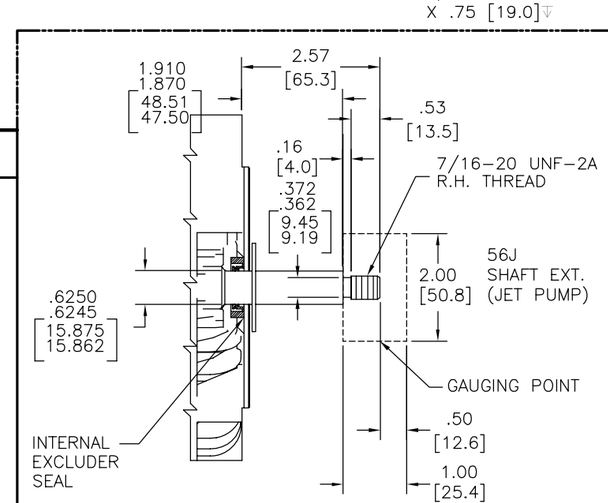

NAMEPLATE DATA

MODEL: 164728
CUST PN: B836
HP: 2.0 SF: 1.20
ROT: CW
RPM: 3450
TYPE: CX CODE: G
FORM: FRAME: Y 56 J
VOLTS: 230/115
AMPS: SF 10.8/21.6
MAX AMPS: ----
SF AMPS:
PH: 1 HZ: 60
INS: B AMB: 50°C
DUTY: CONT
ENCLOSURE: ODP
THERMALLY PROTECTED

EXTERNAL CONNECTION DIAGRAM

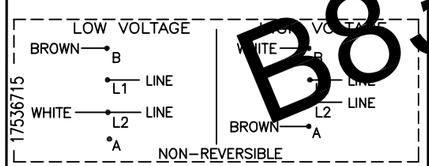

NOTES:

1. PILOT DIAMETER IS CONCENTRIC WITH SHAFT CENTERLINE WITHIN .004[.10] T.I.R.
2. FACE OF MOUNTING FLANGE IS PERPENDICULAR TO SHAFT CENTERLINE WITHIN .004[.10] T.I.R.
3. SHAFT RUNOUT NOT TO EXCEED .002[.05] T.I.R.
4. END PLAY NOT TO EXCEED .010[.25] MEASURED WITH NO THRUST
5. ALL DIMENSIONS SHOWN IN PARENTHESIS ARE REFERENCE DIMENSIONS.

PERFORMANCE CURVE		APPROVED SAMPLE	
16367411		--------	
UL COMPONENT		CSA	
FILE#	CCN#	FILE#	GUIDE#
E14663	XEWR2	LR4642	4211-01
CUSTOMER	DISTRIBUTION		

GEOMETRIC CHARACTERISTICS & SYMBOLS
- FLATNESS
- STRAIGHTNESS
- ANGULARITY
- PERPENDICULARITY (SQUARENESS)
- PARALLELISM
- ROUNDNESS (CIRCULARITY)
- CYLINDRICITY
- PROFILE OF ANY SURFACE
- PROFILE OF ANY LINE
- RUNOUT
- TRUE POSITION
- CONCENTRICITY
- SYMMETRY

UNLESS OTHERWISE SPECIFIED
DIM. TOLERANCES ARE AS FOLLOWS:

	X	XX	XXX	XXXX
INCH	±.1	±.02	±.005	±.0005
mm	±0.5	±0.13	±0.013	

ANG. ±.50 DEG
REMOVE BURRS & BREAK SHARP EDGES:
INCH .003-.015 mm 0.1-0.4
CORNER FILLETS TO:
INCH .020 mm 0.5
MACHINE SURFACES:
INCH 125 mm 3.2
METRIC DIMS. SHOWN IN [BRACKETS]

DR BY: .
APPD: .
THIRD ANGLE PROJECTION
EDS DATE EDS DATE
FORMAT REV F

ASME Y14.5M 1994

A.O. Smith — Innovation has a name.
ELECTRICAL PRODUCTS COMPANY
A DIVISION OF A. O. SMITH CORPORATION

DESCRIPTION: OUTLINE
SIZE: C
DWG NO: 12732-005
SCALE: NONE
SHEET 1

REVISION:	ECO	REVISADO POR:	FECHA:	APROBADO POR:	FECHA:
D	0014523	AS	10-21-2010	TZ	10-21-2010

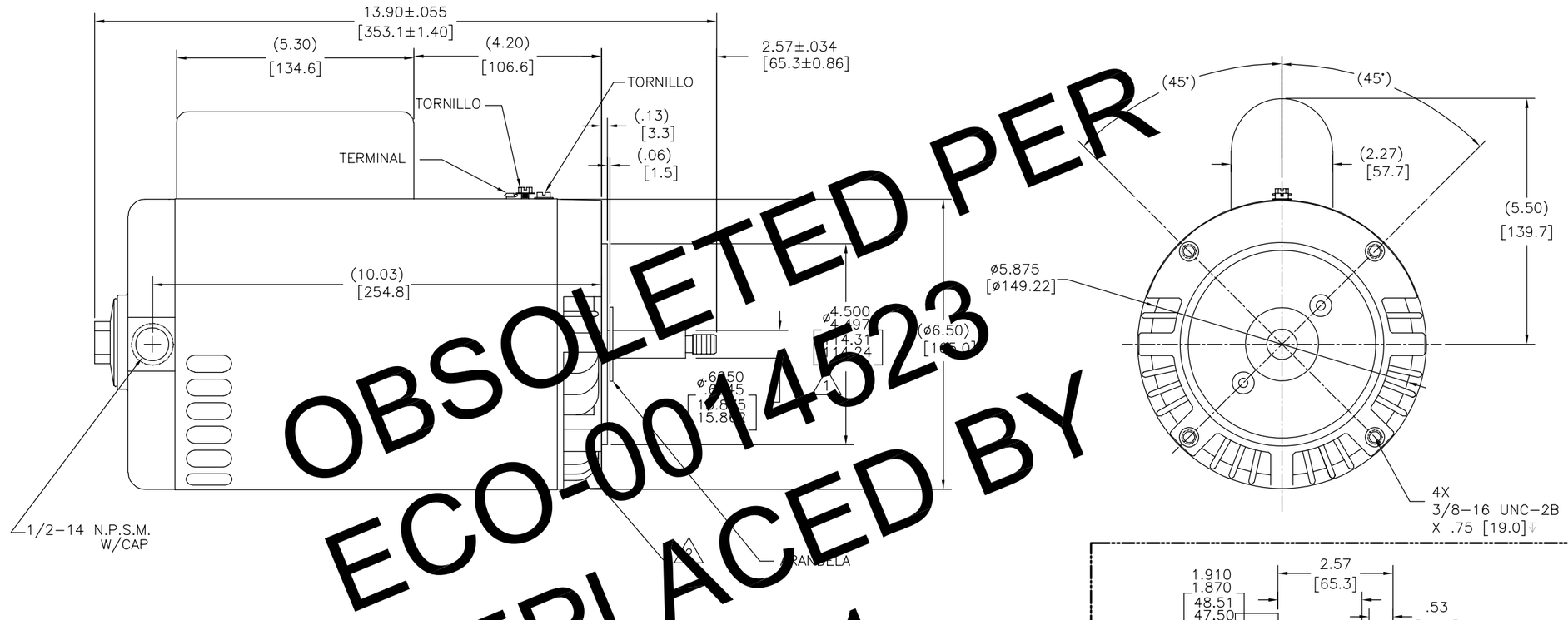

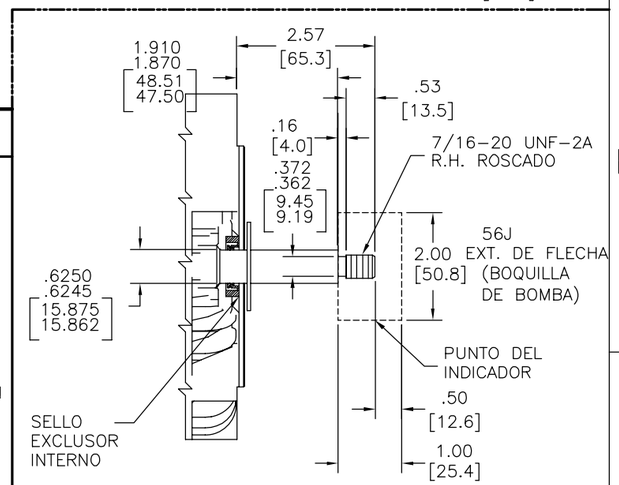

NAMEPLATE DATA

MODEL: 164728
CUST PN: B836
HP: 2.0 SF: 1.20
ROT: CW
RPM: 3450
TYPE: CX CODE: G
FORM: FRAME: Y 56 J
VOLTS: 230/115
AMPS: SF 10.8/21.6
MAX AMPS: ----
SF AMPS:
PH: 1 HZ: 60
INS: B AMB: 50°C
DUTY: CONT
ENCLOSURE: ODP
THERMALLY PROTECTED

EXTERNAL CONNECTION DIAGRAM

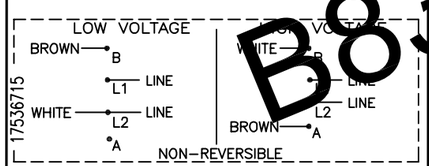

NOTES

NOTAS:

1. EL DIAMETRO GUIA ES CONCENTRICO A LA LINEA DE CENTRO DE LA FLECHA DENTRO DE .004[.10] L.T.I
2. LA CARA DEL REBORDE ES PERPENDICULAR A LA LINEA DE CENTRO DE LA FLECHA DENTRO DE .004[.10] L.T.I
3. LA OSCILACION DE LA FLECHA NO DEBE EXEDER DE .002[.05] L.T.I
4. NO EXCEDER .010[.25] DE JUEGO AXIAL MEDIDO SIN PRESIONAR
5. TODAS LAS DIMENSIIONES MOSTRADAS EN PARENTESIS SON DIMENSIONES DE REFERENCIA.

PERFORMANCE CURVE		APPROVED SAMPLE	
16367411		--------	
UL COMPONENT		CSA	
FILE#	CCN#	FILE#	GUIDE#
E14663	XEWR2	LR4642	4211-01
CUSTOMER	DISTRIBUTION		

CARACTERISTICAS DE GEOMETRIA Y SIMBOLOS
- PLANICIDAD
- RECTITUD
- ANGULARIDAD
- PERPENDICULARIDAD (A ESCUADRA)
- PARALELISMO
- REDONDEZ (CIRCULARIDAD)
- CILINDRICIDAD
- PERFIL DE CUALQUIER SUPERFICIE
- PERFIL DE CUALQUIER LINEA
- VARIACION
- POSICION REAL
- CONCENTRICIDAD
- SIMETRIA

A MENOS QUE SE ESPECIFIQUE DE OTRA MANERA, LAS TOLERANCIAS DE LAS DIMS; SON LAS SIGUIENTES:

	X	XX	XXX	XXXX
PULG	±.1	±.02	±.005	±.0005
mm	±0.5	±0.13	±0.013	

ANG. ±.50 GRADOS
ELIMINAR REBABAS Y ORILLAS FILOSAS DEL BORDE.
PULG .003-.015 mm 0.1-0.4
FILETEAR ESQUINA: PULG .020 mm 0.5
MAQUINAR SUPERFICIES
PULG 125 mm 3.2
DIMS METRICAS MOSTRADAS [PARENTESIS]

DIBUJADO POR: .
APROBADO POR: .
TERCER ANGULO DE PROYECCION
FECHA EDS: EDS DATE
REV. FORMATO: F

 ASME Y14.5M 1994

A.O.Smith Innovation has a name.
ELECTRICAL PRODUCTS COMPANY
A DIVISION OF A. O. SMITH CORPORATION

DESCRIPCION: OUTLINE

TAMAÑO: C
NUMERO DE DIBUJO: 12732-005
ESCALA: NONE
HOJA: 1

版本	ECO	编制	日期	批准	日期
D	0014523	AS	10-21-2010	TZ	10-21-2010

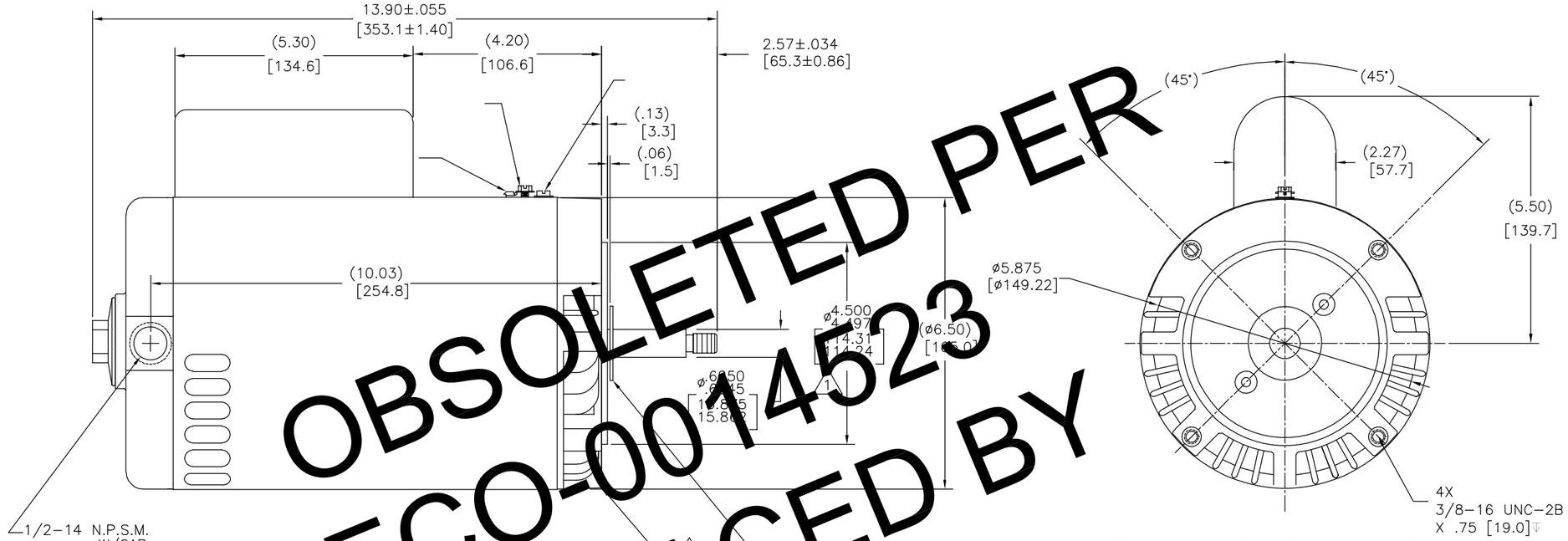

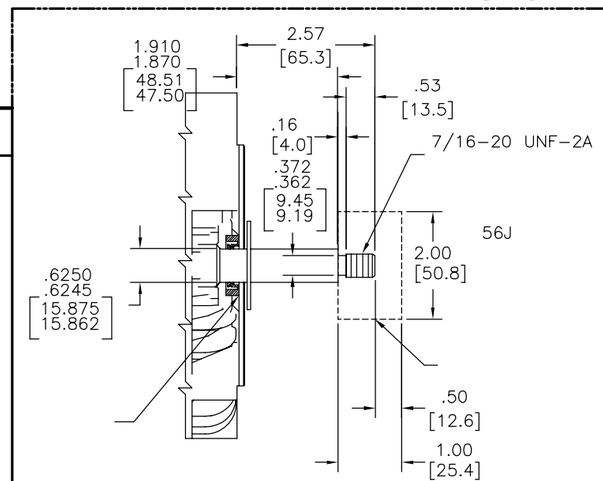

NAMEPLATE DATA

MODEL: 164728
CUST PN: B836
HP: 2.0 SF: 1.20
ROT: CW
RPM: 3450
TYPE: CX CODE: G
FORM: FRAME: Y 56 J
VOLTS: 230/115
AMPS: SF 10.8/21.6
MAX AMPS: ----
SF AMPS:
PH: 1 HZ: 60
INS: B AMB: 50°C
DUTY: CONT
ENCLOSURE: ODP
THERMALLY PROTECTED

EXTERNAL CONNECTION DIAGRAM

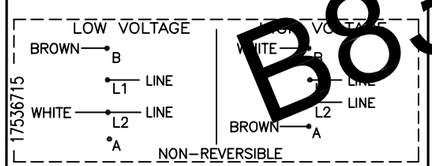

NOTES

PERFORMANCE CURVE		APPROVED SAMPLE	
16367411		--------	
UL COMPONENT		CSA	
FILE#	CCN#	FILE#	GUIDE#
E14663	XEWR2	LR4642	4211-01
CUSTOMER	DISTRIBUTION		

形位公差
平面度
直线度
倾斜度
垂直度
平行度
圆度
圆柱度
面轮廓度
线轮廓度
圆跳动
位置度
同轴度
对称度

除另有注明
尺寸公差如下:

	X	XX	XXX	XXXX
英寸	±.1	±.02	±.005	±.0005
毫米	±0.5	±0.13	±0.013	

角度 ±.50 度
清理毛刺和尖棱
英寸 .003-.015 毫米 0.1-0.4
内圆角
英寸 .020 毫米 0.5
表面粗糙度
英制 125 米制 3.2
米制尺寸显示在[ ]

绘图: .
批准: .
第三角投影
图纸格式发布日期 EDS DATE
图纸格式版本 F

ASME Y14.5M 1994

AO Smith Innovation has a name.
ELECTRICAL PRODUCTS COMPANY
A DIVISION OF A. O. SMITH CORPORATION

名称 OUTLINE
图幅 C
图号 12732-005
比例 NONE
页号 1